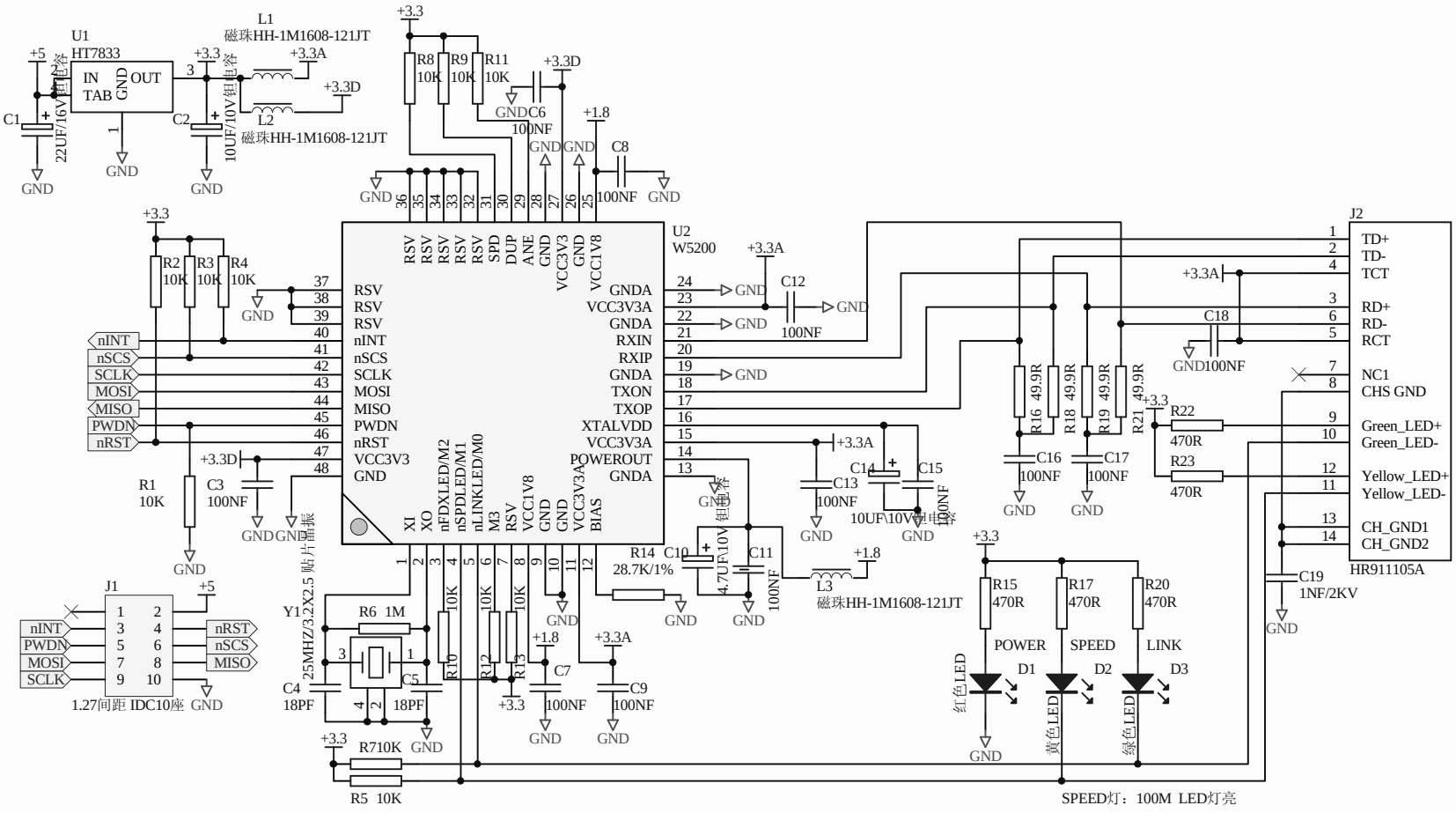

SPEED灯：100M LED灯亮

LINK灯：连接网络 LED亮，收发数据 LED闪烁

Title		
Size A4	Number	Revision
Date: 2012-9-15		Sheet of
File: E:\开发工作\..\W5200 Ethernet.SchDoc		Drawn By: