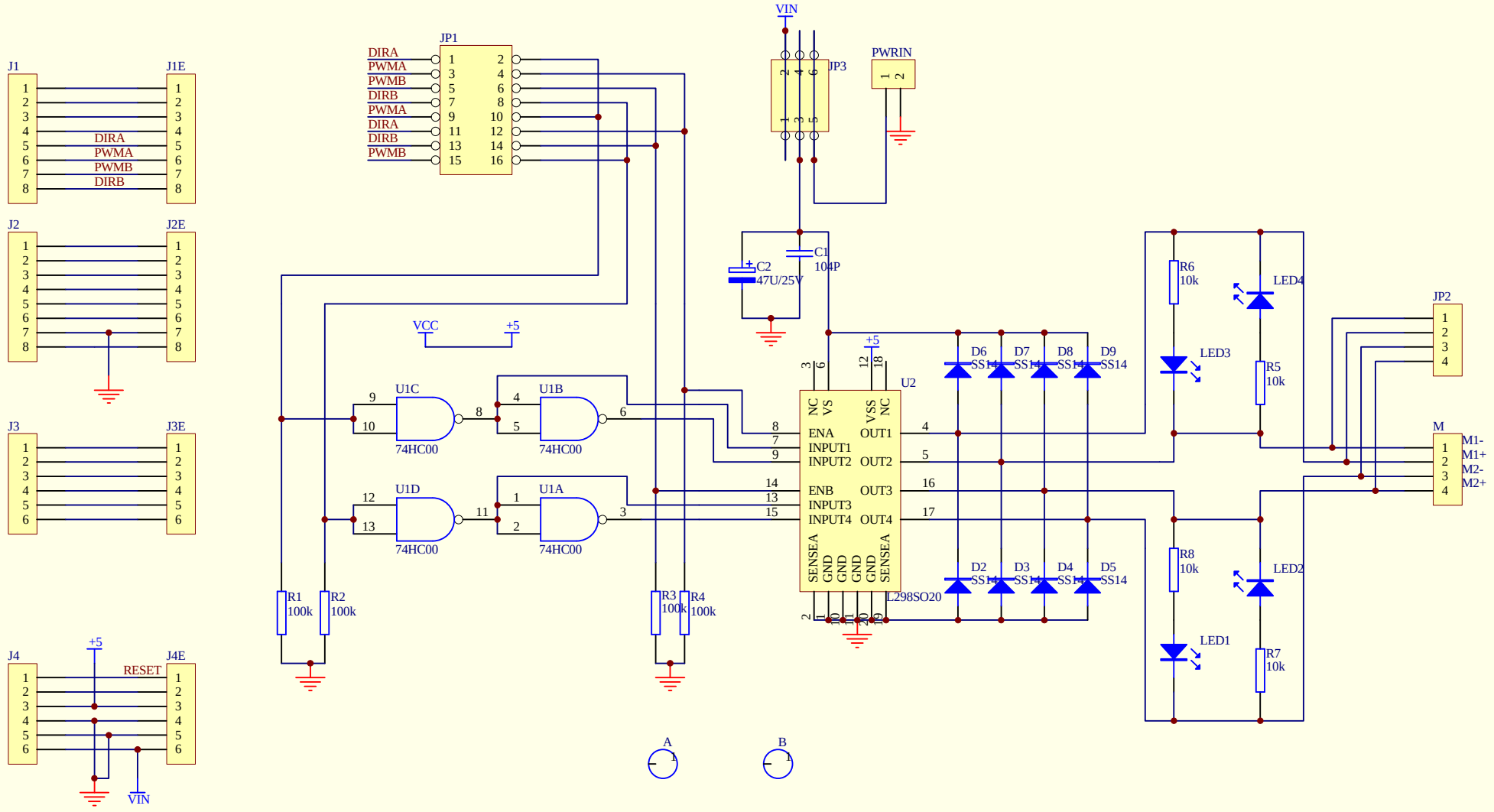

Title	L298 Shield	
Size A4	Number	Revision 1.0
Date: 3-Dec-2010	Sheet of	
File: D:\plan\产品记录\arduino\arduino_NG DM0016.DDB	Drawn By:	