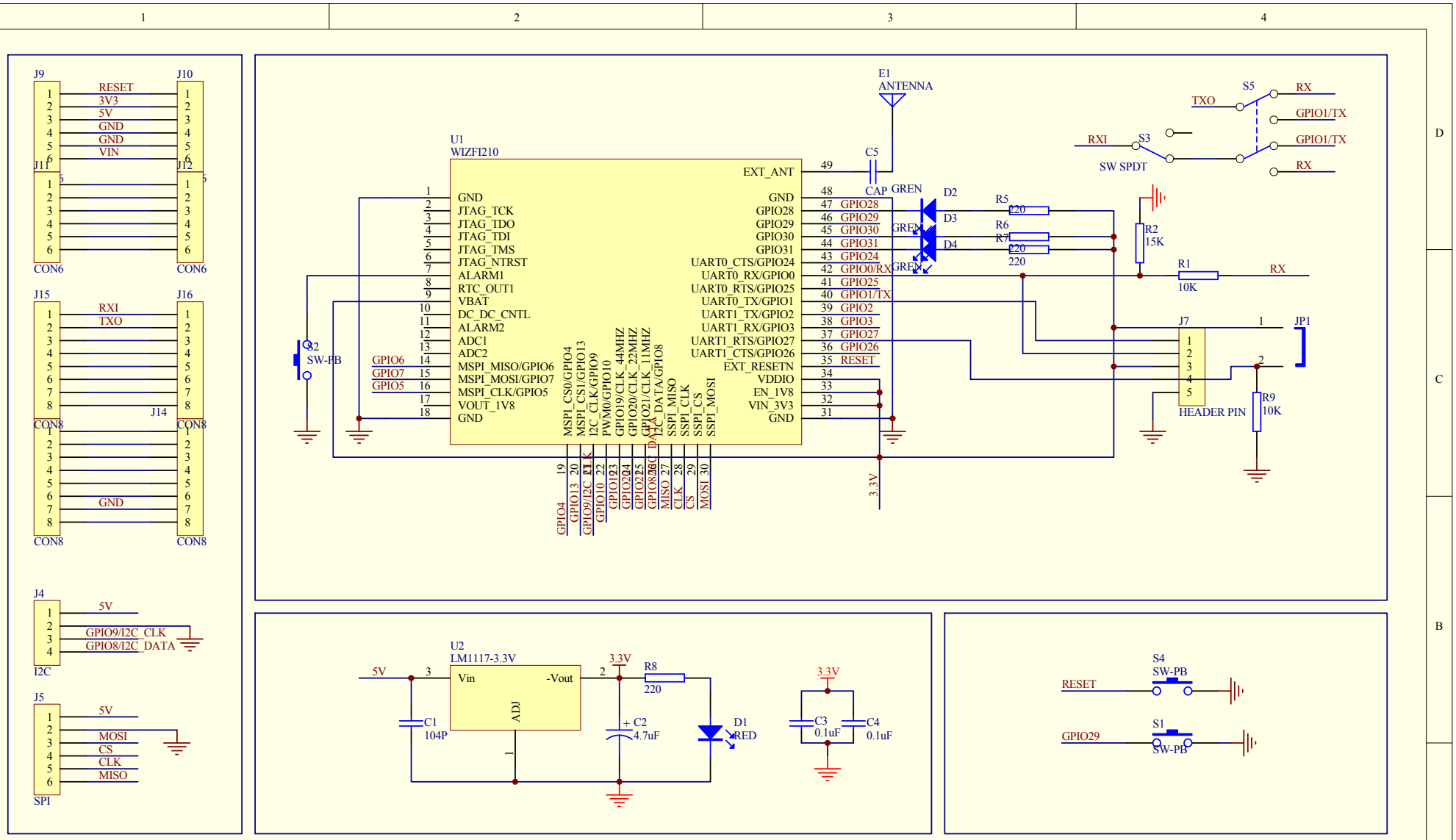

Title	Wifi Shield	
Size A4	Number	Revision 2.2
Date: 7-Jun-2012		Sheet of
File: D:\产品记录\arduino\arduino_NGDM0916.DDB		Drawn By: