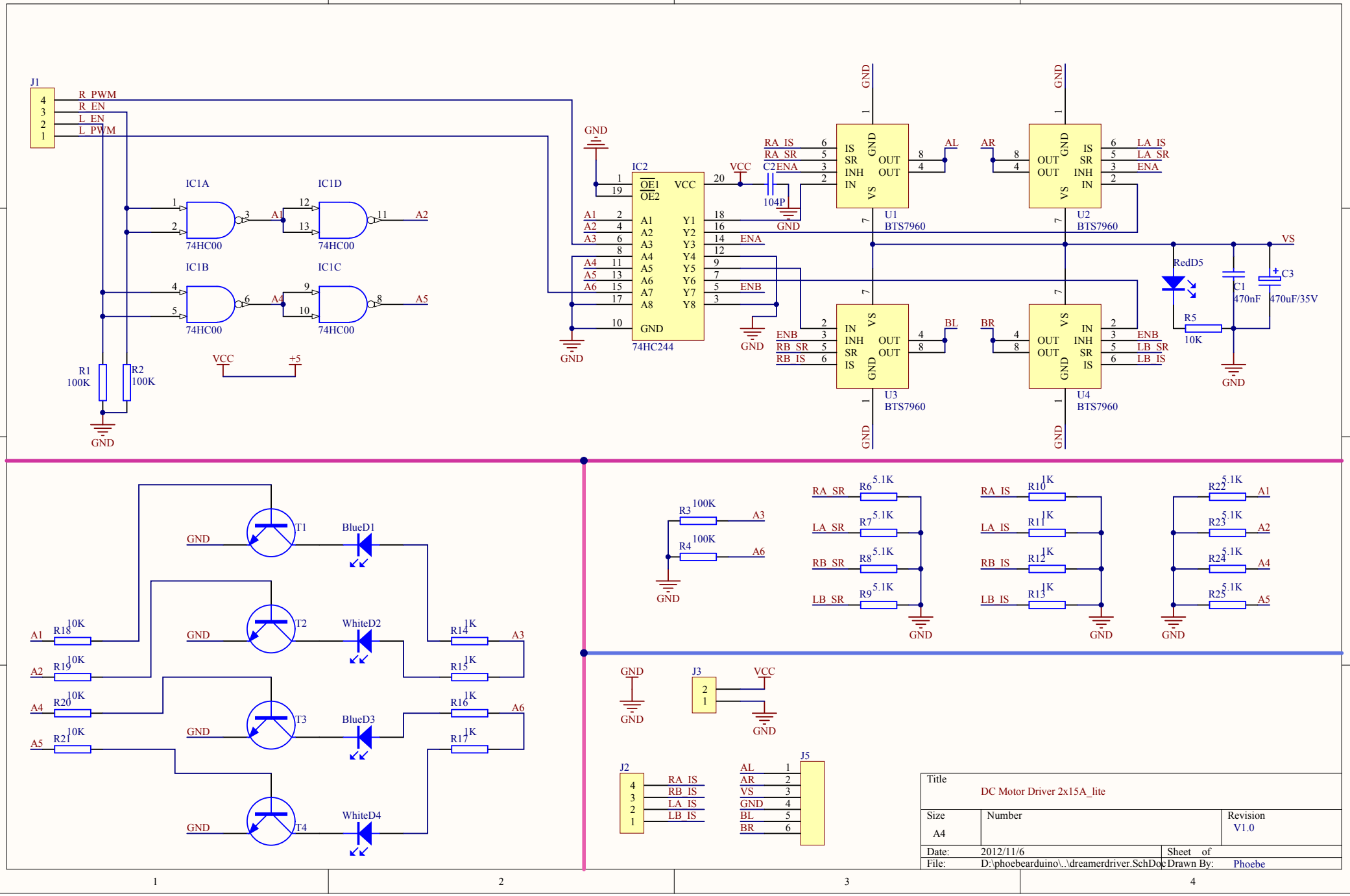
J1
R_PWM
R_EN
L_EN
L_PWM
IC1A
IC1B
IC1C
IC1D
74HC00
R1 100K
R2 100K
VCC
+5
GND
IC2
74HC244
OE1
OE2
VCC
A1
A2
A3
A4
A5
A6
A7
A8
GND
Y1
Y2
Y3
Y4
Y5
Y6
Y7
Y8
ENA
ENB
C2 104P
U1 BTS7960
U2 BTS7960
U3 BTS7960
U4 BTS7960
RA_IS
RA_SR
RB_SR
RB_IS
LA_IS
LA_SR
LB_SR
LB_IS
AL
AR
BL
BR
VS
RedD5
R5 10K
C1 470nF
C3 470uF/35V
T1
T2
T3
T4
BlueD1
WhiteD2
BlueD3
WhiteD4
R18 10K
R19 10K
R20 10K
R21 10K
R14 1K
R15 1K
R16 1K
R17 1K
R3 100K
R4 100K
R6 5.1K
R7 5.1K
R8 5.1K
R9 5.1K
R10 1K
R11 1K
R12 1K
R13 1K
R22 5.1K
R23 5.1K
R24 5.1K
R25 5.1K
J3
J2
J5
Title
DC Motor Driver 2x15A_lite
Size
A4
Number
Revision
V1.0
Date: 2012/11/6
Sheet of
File: D:\phoebearduino\..\dreamerdriver.SchDoc
Drawn By: Phoebe