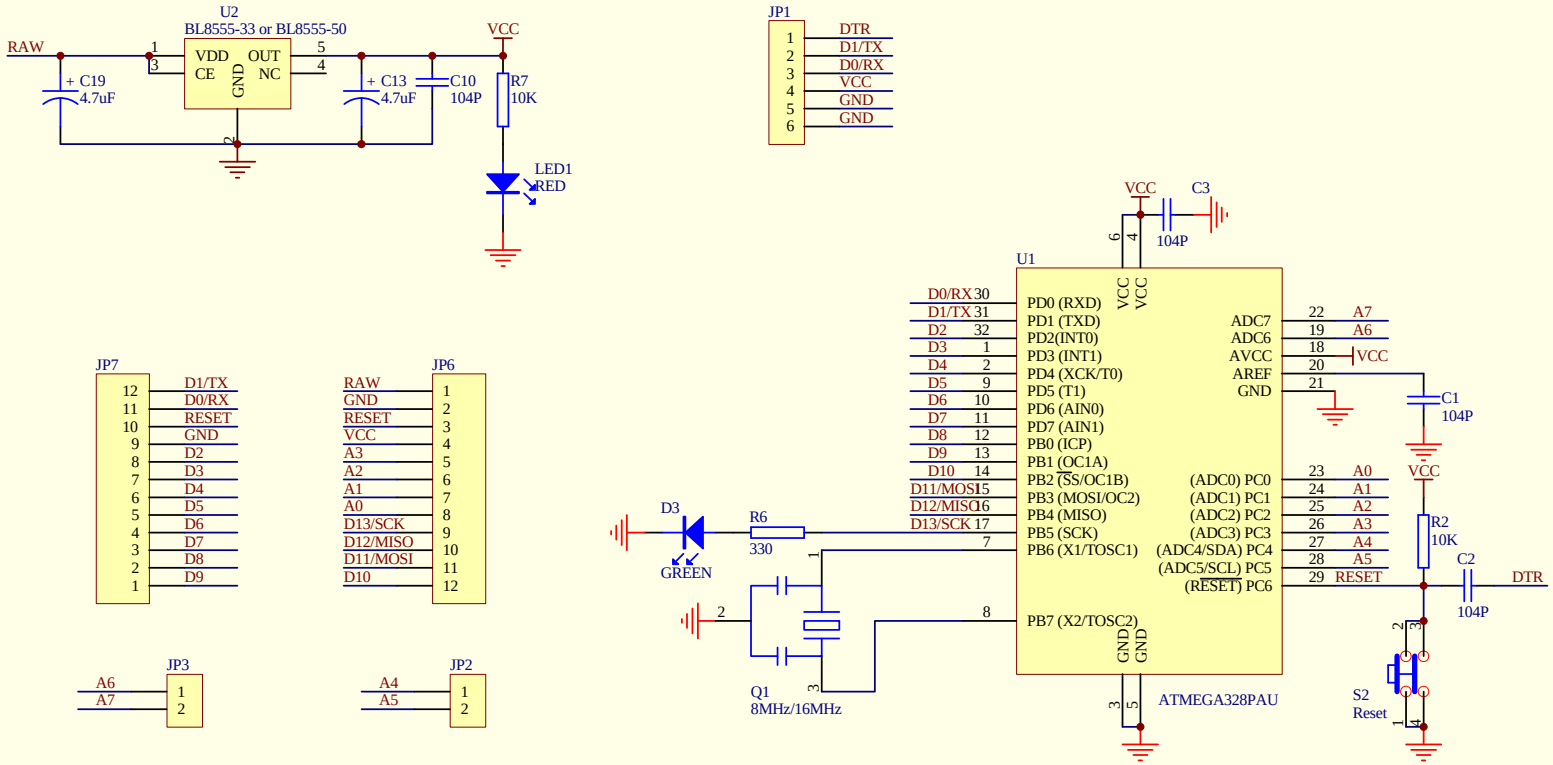

Title	DFRduino Pro Mini		
Size A4	Number		Revision 1.2
Date: 21-Dec-2011		Sheet of	
File: D:\产品记录\arduino\arduino_NG DM0916.DDB		Drawn By:	